Product Details

Hotel Hair Dryers

CARBONIC 1900 W

- Ionic drying technology
- Three temperature settings
- Two air speeds
- Cold shot button
- Removable nozzle
- AC-Motor
- Wall holder HANG-UP
  with LED-lighted interrupter switch
- Integrated overheating protection
- Double insulated (Class II)
- 220-240 V, 50/60 Hz

▸ Hard wire application:

Code	Colour	Heat / Speed Settings
010502	carbon-pattern	Cool/950/1900 W

▸ With additional cord and plug for plug-in application:

Code	Colour	Heat / Speed Settings
010511	carbon-pattern	Cool/950/1900 W

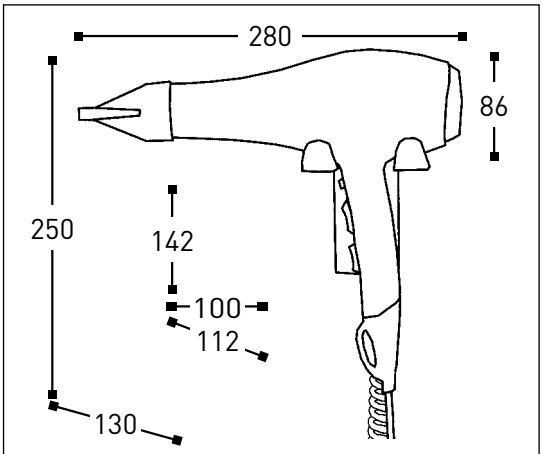

Dimensions in mm	W	x	H	x	D
Hair Dryer	280	x	250	x	86
Holder	100	x	142	x	112
Complete (incl. Coil Cord)	280	x	485	x	130
Coil Cord	60 cm, extended: 150 cm				

Cleaning Instructions - Hair Dryer:

- Disconnect the hand dryer from the power supply.
- Wipe the case of the hairdryer with a damp (NOT wet) cloth.
- Polish with a dry cotton cloth.

ALISEO GmbH · Leutkirchstraße 63 · 77723 Gengenbach
Tel. +49 (0) 7803-60279-0
Fax +49 (0) 7803-60279-30
E-Mail: info@aliseo.de · Internet: www.aliseo.de

ALISEO GmbH
GERMANY